BROWNING Spinning - 6100 Series

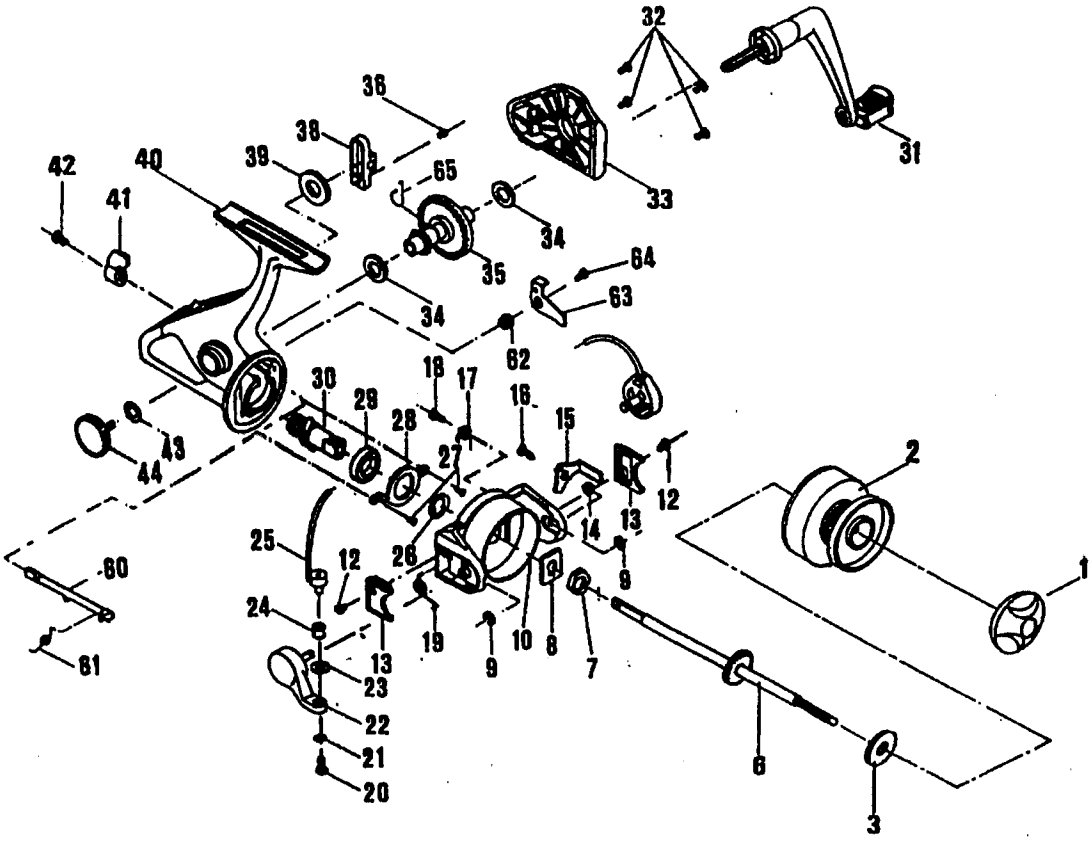

6106 / 6110 / 6112 / 6115 PARTS LIST

KEY NO.	PART NUMBER 6106	6110	6112	6115	DESCRIPTION	PRICE
1	P306366	P306368	P306370	-	DRAG KNOB ASSY.	1.00
2	S630030	S630031	S630032	S630033	SPOOL ASSY.	5.00
3	P306383	-	-	-	WASHER	0.70
4	-	-	-	-	-	-
5	-	-	-	-	-	-
6	P306286	P306287	P306288	-	MAIN SHAFT ASSY.	2.70
7	P306306	-	-	-	ROTOR RETNG NUT	0.70
8	P306302	-	-	-	WASHER	0.70
9	P306394	-	-	-	RETNG RING	0.70
10	P306262	P306264	P306258	P306260	ROTOR	8.70
11	-	-	-	-	-	-
12	P306312	-	-	-	COVER SCREW	0.70
13	P306393	-	P306389	-	COVER	1.35
14	P306303	-	P306304	-	BL ARM LVR WSHR	0.70
15	P306297	P306298	P306296	P306295	BL ARM LVR	1.35
16	P306313	-	-	-	BL ARM LVR SCREW	0.70
17	P306353	P306354	P306346	-	BL ARM LVR SPRNG	0.70
18	P306311	-	-	-	SCREW	0.70
19	P306344	-	-	-	BL ARM SPRNG	0.70
20	P306317	-	-	-	LNE ROLLER SCREW	0.70
21	-	-	-	-	-	-
22	P306294	-	-	-	BL ARM CAM	1.15
23	P306333	-	P306383	-	WASHER	0.70
24	P306323	-	-	-	LNE ROLLER	1.35
25	P306360	P306362	P306356	P306358	BL ARM ASSY.	2.80

KEY NO.	PART NUMBER 6106	6110	6112	6115	DESCRIPTION	PRICE
26	P306324	-	-	-	WASHER	0.50
27	P306315	-	-	P306318	BRING HOLDER SCRW	0.70
28	P306064	-	P306383	-	BRING HOLDER	0.70
29	P306380	-	P306379	-	BALL BEARING	8.55
30	P306272	-	P306271		PINION GEAR	4.15
31	P306267	-	P306266	-	HANDLE ASSY.	6.15
32	P306314	-	-		SIDE PLTE SCRW	0.70
33	P306251	P306252	P306255	P306256	SIDE PLTE	6.00
34	P306382	-	-	-	BUSHING	1.00
35	P306268	-			MAIN GEAR	4.70
36	P306320	-	P306321	-	RETNG PLTE SCRW	0.70
37	-	-	-		-	-
38	P306282	-	P306383	-	OSCLTNG SLIDER	1.35
39	P306278	-	P306276	-	OSCLTNG GEAR	1.35
40	P306234	P306235	P306238	P306239	MAIN BODY	13.35
41	P306299	-	P306301	-	ANTI-REVSE LVR	1.35
42	P306313	-	-	-	SCREW	0.70
43	P306334	-	-	-	RETNING WSHR	0.35
44	P306307	-	-	-	HNDLE RETNG SCRW	0.90
45-59	-	-	-	-	-	-
60	P306292	-	P306291	–	ANTI-REVSE LVR SHFT	1.50
61	P306342	-	-	-	ANTI-REVSE SPRNG	0.70
62	P306336	-	P306337	-	WASHER	0.70
63	P306375	-	P306376	-	ANTI-REVSE CLAW	0.70
64	P306313	-	-	-	CLAW SCREW	0.70