Daiwa
COMMITTED TO TOTAL QUALITY

FLY REEL **SF706/708**

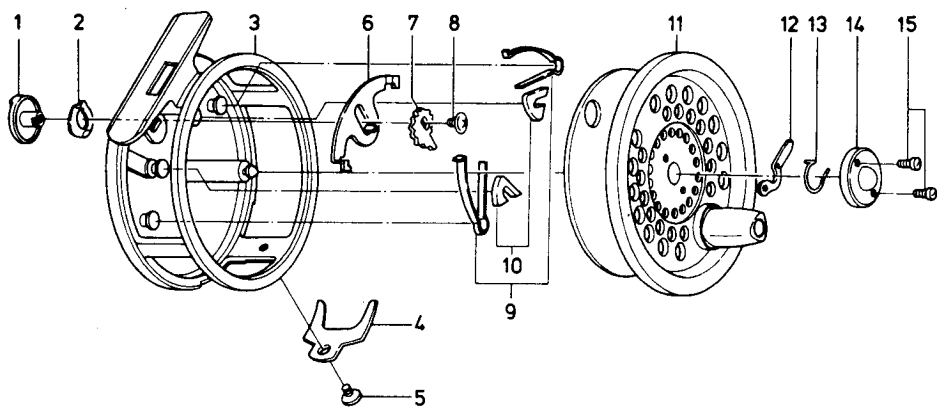

Key No.	Parts No.	Parts Name
1	B83-8201	Click lever
2	150-1751	Click lever washer
3	B81-3301	Body
4	B81-3901	Line guard
5	352-0601	Line guard screw
6	B03-1301	Click plate
7	B03-1401	Cam
8	352-0601	Click plate screw
9	B28-6001	Click spring
10	B36-5502	Click claw
11	B81-5201	Spool
12	B81-4401	Spool stopper
13	B03-2801	Spool stopper spring
14	B83-8301	Cover
15	B64-6601	Cover screw

SF708 Special Parts

3	B81-8701	Body
4	B84-5001	Line guard
11	B81-8901	Spool