Daiwa
COMMITTED TO TOTAL QUALITY

MULTIPLYING REEL **Sealine 20SH**

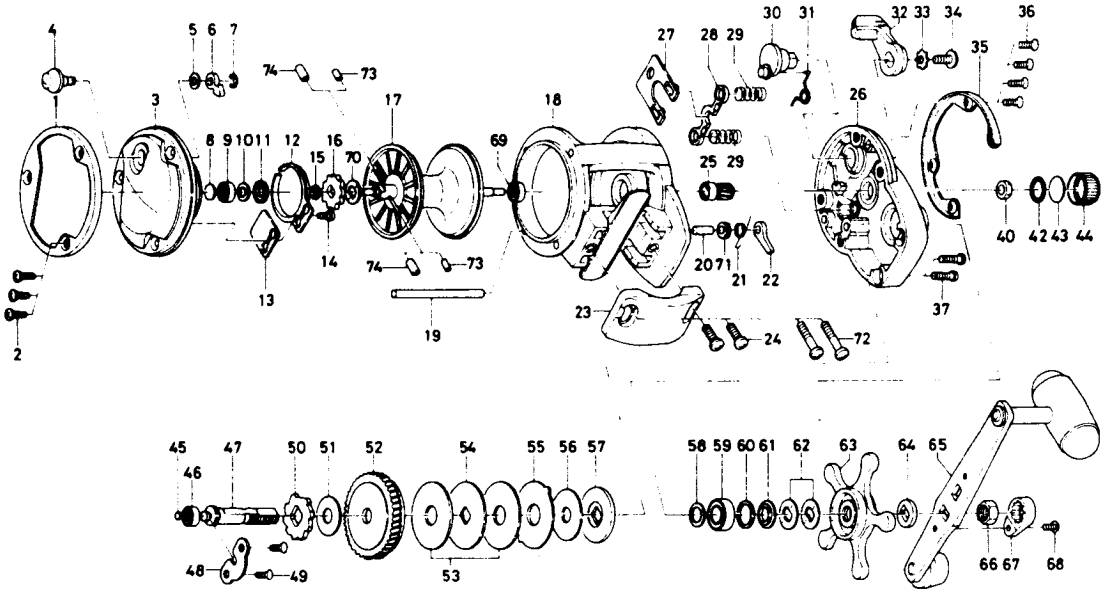

Key No.	Parts No.	Parts Name
1	E31-8201	Left side outer ring
2	E31-7401	Left side plate screw
3	E34-5201	Left side plate
4	E36-1301	Click button
5	373-1600	Click pawl washer
6	030-6612	Click pawl
7	320-1402	Click pawl retainer
8	375-7405	Spacer
9	637-4601	Ball bearing A
10	E32-6601	Bearing washer A
11	E31-8001	Ball bearing collar A
12	160-7922	Click spring
13	E36-1201	Click spring retainer
14	B83-4402	Click spring screw
15	320-1402	Click gear retainer
16	B21-6701	Click gear
17	E34-5101	Spool assembly
18	E31-5801	Frame assembly
19	E31-6001	Stabilizer bar
20	E25-2301	Anti-reverse pawl pin
21	E31-6501	Anti-reverse pawl spring
22	E31-6401	Anti-reverse pawl
23	E31-8301	Rod brace
24	E31-8401	Clamp bolt A
25	E31-6201	Pinion gear
26	E31-5101	Right side plate
27	E31-6101	Yoke plate
28	E36-1101	Yoke
29	E33-5301	Yoke spring
30	E31-5501	Clutch cam
31	144-6401	Clutch spring
32	E24-9802	Clutch lever
33	160-8001	Clutch lever lock washer
34	E00-7602	Clutch lever screw
35	E31-7301	Right side outer ring
36	E31-7401	Right side plate screw
37	351-8502	Stand screw
40	B54-6401	Bushing
42	B05-5201	"O" ring
43	375-7501	Spacer A
44	E31-5401	Cast control cap
45	B12-0201	Drive shaft washer A
46	B35-8601	Ball bearing B
47	E31-6601	Drive shaft
48	E19-9401	Drive shaft retainer
49	E31-6701	Drive shaft retainer screw
50	E25-2903	Anti-reverse ratchet
51	374-6604	Drive shaft washer B
52	E31-6801	Drive gear
53	E31-6901	Drag washer A
54	E31-7001	Key washer A
55	E31-7101	Eared washer
56	E32-6501	Drag washer B
57	E31-7201	Key washer B
58	373-7807	Bearing washer B
59	B62-8601	Ball bearing C
60	E34-4901	Bearing washer C
61	E25-3301	Ball bearing collar B
62	E25-3501	Drag spring washer
63	E25-3602	Star drag
64	E25-3901	Spacing sleeve
65	E17-5501	Handle assembly
66	B86-2102	Handle nut
67	B86-2301	Handle nut plate
68	352-2503	Handle nut plate screw
69	E18-2802	Ball bearing D
70	E36-1401	Click spring washer
71	F00-8001	Spring holder
73	B35-2701	Brake collar A
74	B77-0201	Brake collar B

Sealine 20SH-A special parts

3	E34-5202	Left side plate
18	E31-5702	Frame assembly
26	E31-5102	Right side plate
46	B55-0301	Ball bearing B
72	E34-4401	Clamp bolt B