SHIMANO®

SPIREX

SR-1000RE

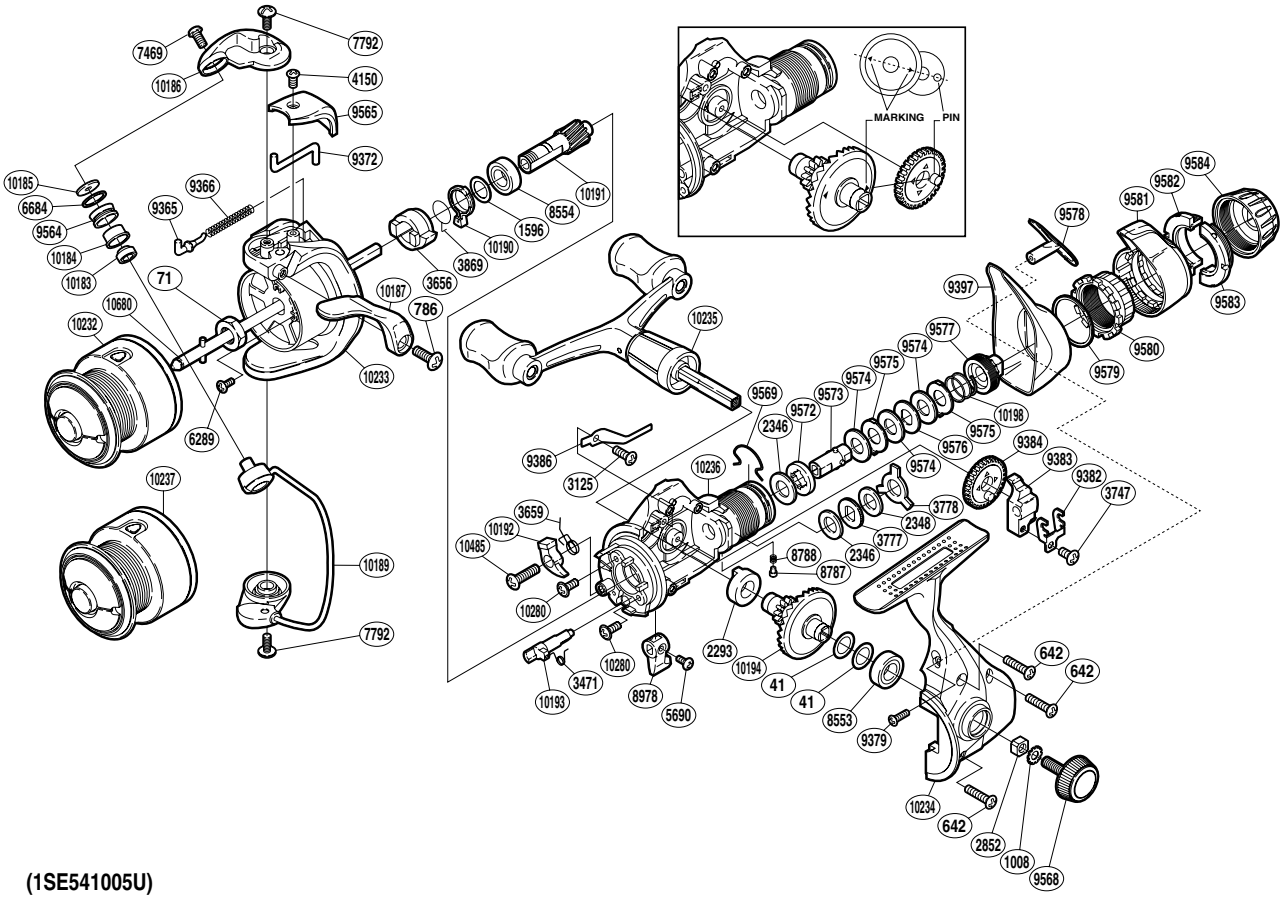

(1SE541005U)

Part No.	Description	Part No.	Description	Part No.	Description
RD 0041	Washer	RD 8787	Click Pin	RD 9582	Drag Programmer B1
RD 0071	Rotor Nut	RD 8788	Click Spring	RD 9583	Drag Programmer B2
RD 0642	Screw	RD 8978	Anti-Reverse Lever	RD 9584	Drag Programmer A
RD 0786	Screw	RD 9365	Bail Spring Guide	RD10183	Ball Bearing
RD 1008	Handle Lock Washer	RD 9366	Bail Spring	RD10184	Line Roller Bushing
RD 1596	Washer	RD 9372	Bail Trip Lever	RD10185	Line Roller Washer
RD 2293	Drive Gear Bushing	RD 9379	Screw	RD10186	Bail Arm
RD 2346	Drag Washer	RD 9382	Oscillating Slider Retainer	RD10187	Quick-Fire II Trigger
RD 2348	Drag Washer	RD 9383	Oscillating Slider	RD10189	Bail Assembly
RD 2852	Handle Screw Lock	RD 9384	Oscillating Gear	RD10190	Anti-Reverse Lock Out
RD 3125	Screw	RD 9386	Drag Click	RD10191	Pinion Gear
RD 3471	Anti-Reverse Cam Spring	RD 9397	Rear Protector B	RD10192	Anti-Reverse Pawl
RD 3656	Anti-Reverse Ratchet	RD 9564	Line Roller	RD10193	Anti-Reverse Cam
RD 3659	Anti-Reverse Pawl Spring	RD 9565	Bail Spring Cover	RD10194	Drive Gear
RD 3747	Screw	RD 9568	Handle Screw Cap	RD10198	Drag Coil Spring
RD 3777	Click Gear	RD 9569	Hold Click Spring	RD10232	Spool Assembly
RD 3778	Eared Washer	RD 9572	Drag Shaft B	RD10233	Rotor
RD 3869	Anti-Reverse Lock Out Spring	RD 9573	Drag Shaft A	RD10234	Side Cover
RD 4150	Screw	RD 9574	Drag Washer	RD10235	Double Paddle Handle Assembly
RD 5690	Screw	RD 9575	Eared Washer	RD10236	Body
RD 6289	Screw	RD 9576	Key Washer	RD10280	Screw
RD 6684	Line Roller Spacer	RD 9577	Pressure Screw	RD10485	Screw
RD 7469	Screw	RD 9578	Rear Protector A	RD10680	Main Shaft
RD 7792	Screw	RD 9579	Fightin' Pressure Screw Washer		
RD 8553	Ball Bearing	RD 9580	Fightin' Pressure Screw		
RD 8554	Ball Bearing	RD 9581	Fightin' Lever	RD10237	Spare Spool Assembly