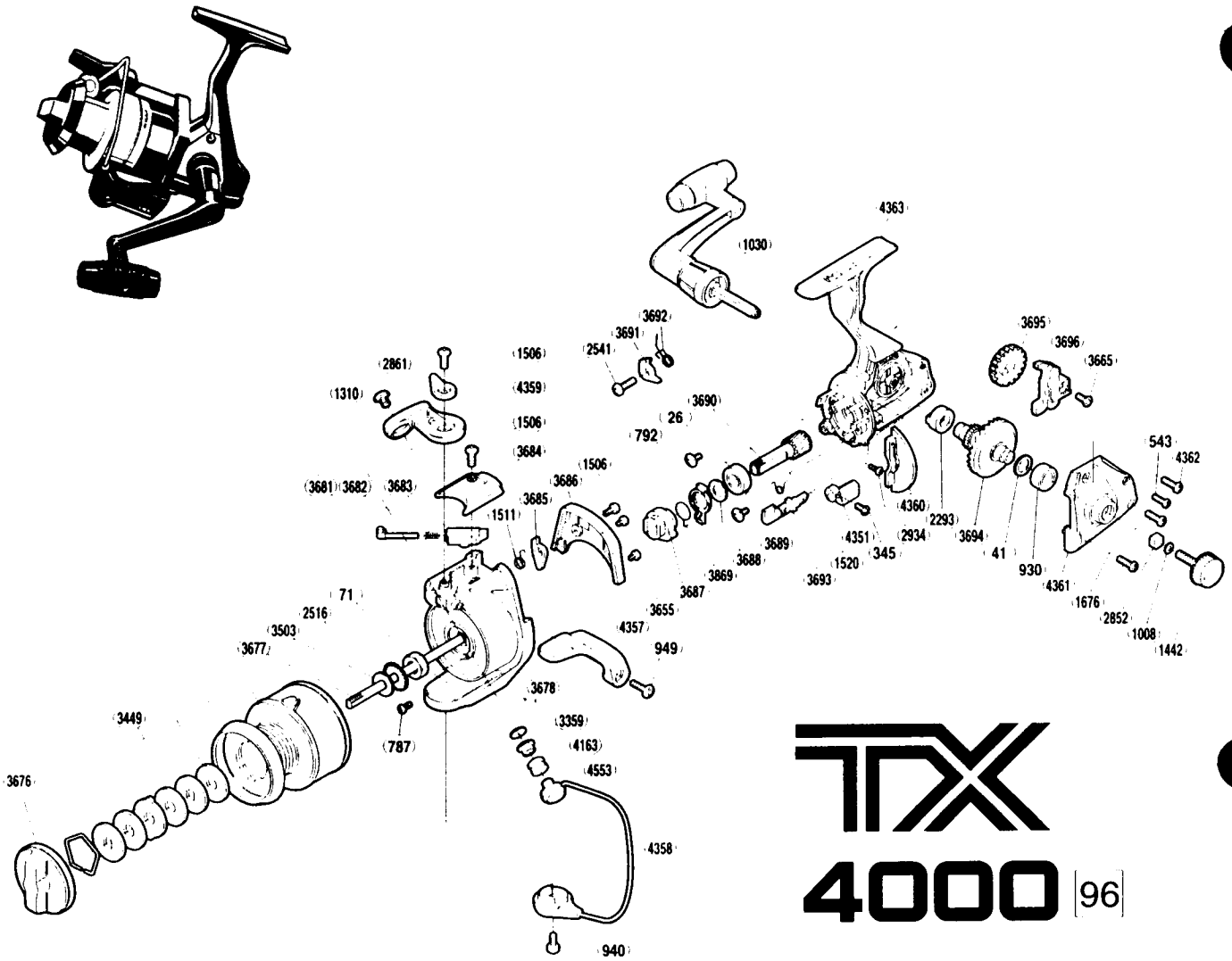

TX 4000 96

TX4000F

Part #	Description	Part #	Description	Part #	Description
RD 0026	Ball Bearing	RD 2541	Anti-Reverse Pawl Screw	RD 3689	Bushing Washer
RD 0041	Drive Gear Washer	RD 2852	Handle Screw Lock	RD 3690	Pinion Gear
RD 0071	Rotor Nut	RD 2861	Trigger Cam	RD 3691	Anti-Reverse Pawl
RD 0345	Anti-Reverse Lever Screw	RD 2934	Flange Screw	RD 3692	Anti-Reverse Pawl Spring
RD 0543	Side Cover Screw (small)	RD 3359	Line Roller Washer	RD 3693	Anti-Reverse Cam
RD 0787	Nut Lock Screw	RD 3449	Spool Assembly	RD 3694	Drive Gear
RD 0792	Bearing Retainer Screw	RD 3503	Spool Washer	RD 3695	Oscillating Gear
RD 0930	Ball Bearing	RD 3655	Cover Screw	RD 3696	Oscillating Slider
RD 0940	Bail Hold Support Screw	RD 3665	Slider Retainer Screw	RD 3869	Anti-Reverse Lock Out Spring
RD 0949	Trigger Screw	RD 3676	Drag Knob	RD 4163	Line Roller Bushing
RD 1008	Handle Lock Washer	RD 3677	Main Shaft	RD 4351	Anti-Reverse Lever
RD 1030	Handle Assenbly	RD 3678	Rotor	RD 4357	Quick-Fire II Trigger
RD 1310	Line Roller Screw	RD 3681	Bail Spring Guide (A)	RD 4358	Bail Assembly
RD 1442	Handle Screw Cap	RD 3682	Bail Spring	RD 4359	Bail Arm
RD 1506	Multi-Purpose Screw	RD 3683	Bail Spring Guide (B)	RD 4360	Side Cover Flange
RD 1511	Lever Spring	RD 3684	Bail Spring Cover	RD 4361	Side Cover
RD 1520	Anti-Reverse Cam Spring	RD 3685	Bail Trip Lever	RD 4362	Side Cover Screw (large-silver)
RD 1676	Side Cover Screw (large-black)	RD 3686	Counterbalance Cover	RD 4363	Body
RD 2293	Drive Gear Bushing	RD 3687	Anti-Reverse Ratchet	RD 4553	Line Roller (Power)
RD 2516	Spool Support	RD 3688	Anti-Reverse Lock Out		