Please order by parts number,not key number
Bitte,Best:-Nr.angeben(Nicht " key " -nr.)
Veuillez indiquer le numero de`la piece(Non " key " no.)

TICA WARRANTY QUALITY

SALTWATER REEL SEASPIRIT SP458R/V / 558R/V

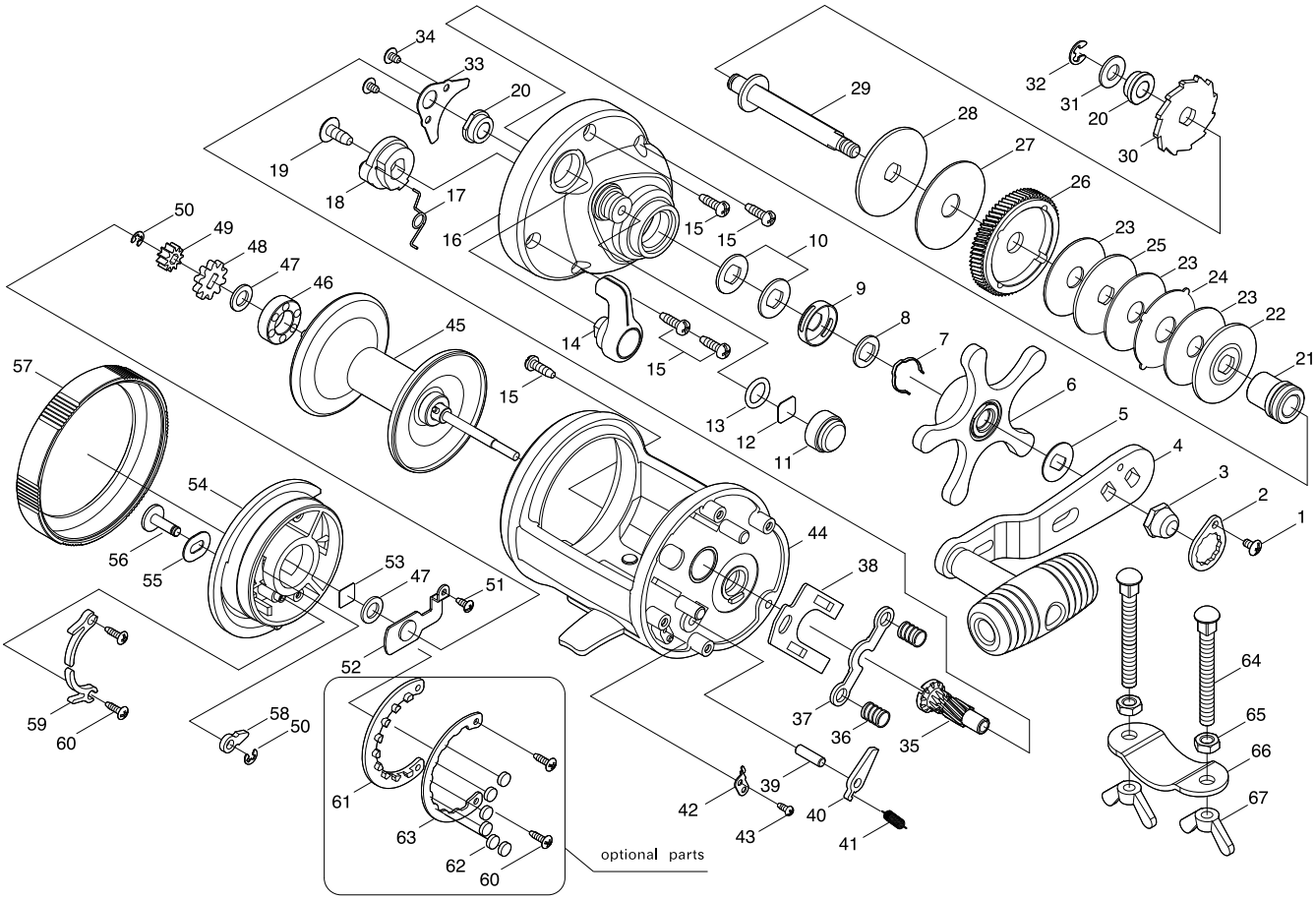

Key NO.	Parts No.	Parts name
1	2E2-006-01	B26M-050 SCREW
2	2F6-043-01	ROTOR NUT HOLDING PLATE
3	2E3-027-01	HANDLE NUT
4	2YH-178-01	HANDLE TOTAL ASSEMBLY
5	2W2-044-01	KEY WASHER
6	2YD-046-02	STAR DRAG LEVER ASSY
7	2L3-025-01	CLICK LEAF SPRING
8	2W2-043-01	KEY WASHER
9	2F8-060-01	CLICK LEAF SPRING HOLDER
10	2L1-007-01	SPRING WASHER
11	2E3-048-01	CAST CONTROL NUT
12	2W5-029-01	CAST CONTROL SPACER
13	2E9-005-01	O RING
14	2S3-022-02	CLUTCH LEVER
15	2E1-009-01	A30-100 SCREW
16	2F5-306-03	RUGHT SIDE COVER
17	2Q3-099-01	CLUTCH SPRING
18	2A2-069-01	CLUTCH CAM
19	2E1-014-01	B40-100 SCREW
20	2Z2-017-01	BUSHING
21	2C1-088-01	DRIVE SHAFT COLLAR
22	2W2-054-01	KEY WASHER
23	2W1-192-01	090-340 WASHER
24	2W3-030-01	EARED WASHER
25	2W2-053-01	KEY WASHER
26	2G1-089-01	DRIVE GEAR
27	2W1-192-01	090-034 WASHER
28	2W2-059-01	KEY-WASHER
29	2M3-110-01	DRIVE SHAFT
30	2A3-034-01	RATCHET
31	2W1-169-01	061-120 WASHER
32	2E5-028-01	E4.0 RETAINER
33	2F6-092-01	HOLDING PLATE
34	2E1-036-01	B26-040 SCREW
35	2G2-102-01	PINION GEAR
36	2Q1-080-01	YOKE SPRING
37	2A2-068-01	PINION YOKE
38	2F6-095-01	YOKE PLATE
39	2P1-036-01	ANTI-REVERSE PAWL PIN
40	2A4-064-01	ANTI-REVERSE PAWL
41	2Q2-009-01	CLICK PAWL SPRING
42	2F6-094-01	SPRING RETAIN
43	2E1-032-01	A20-050 SCREW
44	2YB-195-02	BODY ASSEMBLY
45	2YS-208-01	SPOOL ASSEMBLY
46	2Z1-035-05	917-5 BALL BEARING
47	2W1-097-01	059-100 WASHER
48	2F3-052-01	CLICK GEAR
49	2G3-075-01	SPOOL GEAR
50	2E5-006-01	E2.5 RETAINER
51	2E1-020-02	B22-055 SCREW
52	2F6-098-01	RETAINER
53	2W5-015-01	CAST CONTROL SPACER
54	2F5-303-03	LEFT SIDE COVER
55	2W5-040-01	CLICK SWITCH WASHER
56	2F7-006-01	CLICK SWITCH
57	2E3-060-02	SIDEPLATE HOLDING NUT
58	2F4-019-01	CLICK PAWL
59	2F2-020-01	CLICK SPRING
60	2E1-048-01	B22-080 SCREW
61	2F6-097-01	MAGNET RETAIN
62	2D3-030-01	MAGNET
63	2F6-096-01	MAGNET SET PLATE
64	2E2-043-01	X50M-400 SCREW
65	2E3-022-01	ROD CLAMP BOLT
66	2F6-029-01	ROD CLAMP
67	2E3-023-01	WING NUT
SP558R/V	**SPECIAL PARTS**	
16	2F5-306-07	RIGHT SIDE COVER
44	2YB-194-02	BODY ASSEMBLY
45	2YS-210-01	SPOOL ASSEMBLY
54	2F5-303-07	LEFT SIDE COVER
57	2E3-060-04	SIDEPLATE HOLDING NUT